Please read instructions in their entirety before proceeding with any part of the installation.
This luminaire must be installed in accordance with the National Electric Code and local regulations. For use only with Vode MLR System parts supplied by Vode Lighting LLC. Use of ballasts or other components not supplied by Vode Lighting voids warranty. To prevent electric shock, turn off electricity at the fuse box.
Do not install this product in wet locations. UL listed for dry and damp locations only.
Retain instructions for future reference. Technical Support: 707-996-9898

Components for MLR System - Two Lamp Rail - Multi Rail System with 6' or 8' Rails - 4" Canopy

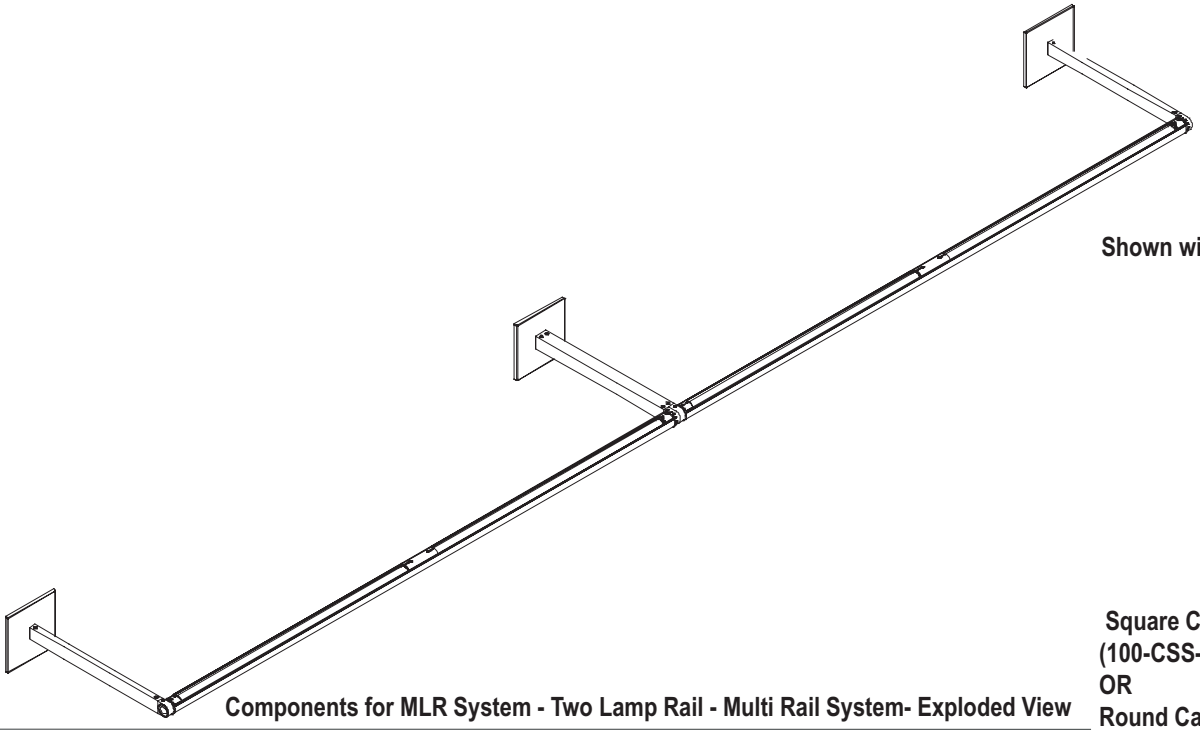

Components for MLR System - Two Lamp Rail - Multi Rail System- Exploded View

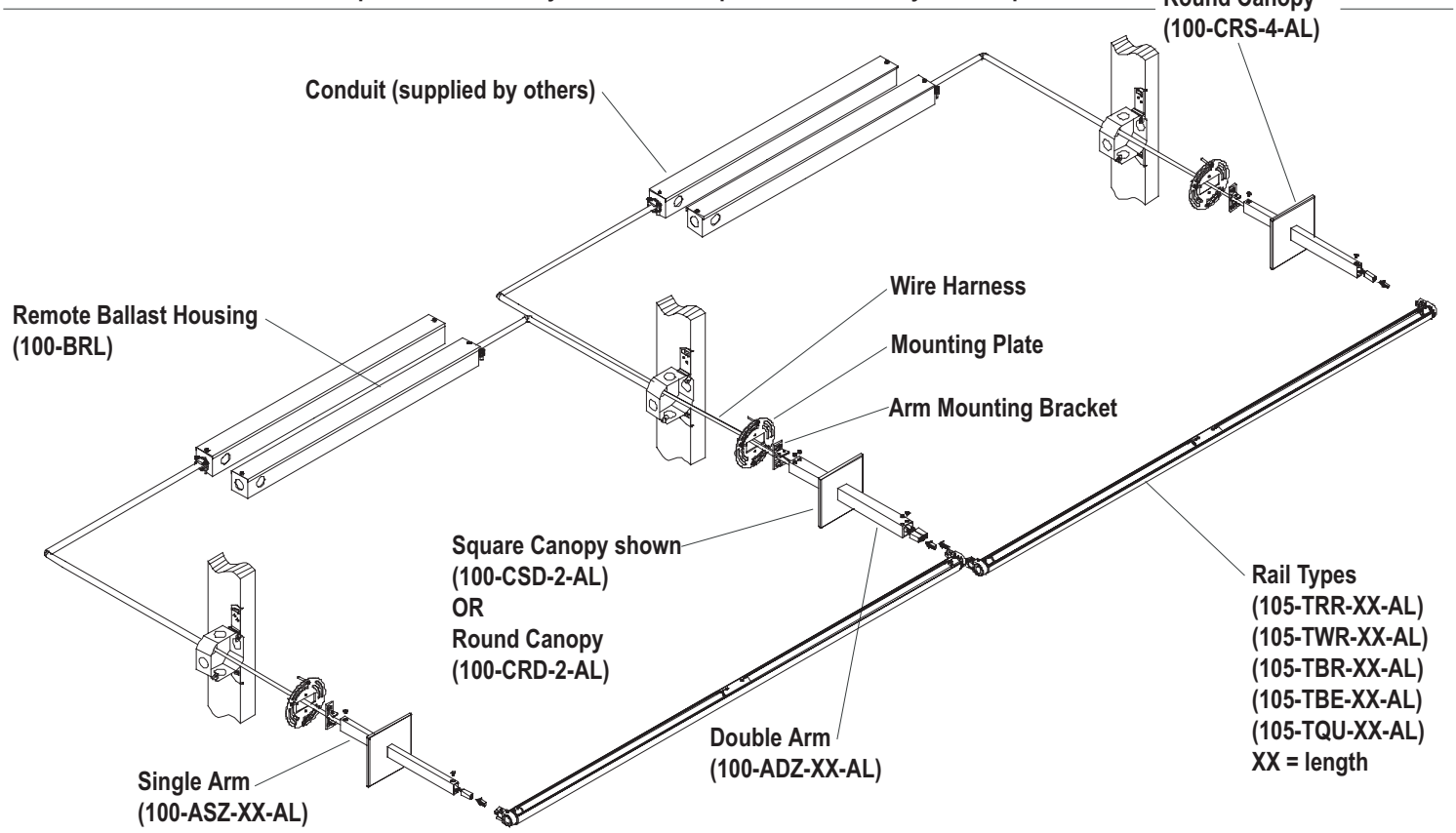

Vode Lighting LLC 1206 East MacArthur Street Suite 3 Sonoma, CA 95476 **T** 707 996 9898 **F** 707 996 9797 www.vode.com

Vode Lighting LLC reserves the right to change materials or modify the design of its product without notification. Patents Pending.

Copyright Vode Lighting LLC 2006. All Rights Reserved.

❶ Laying out the J-Boxes:

To determine J-Box location and layouts, refer to the Layout Diagram on page 4.
Accurate placement and alignment of J-Boxes in very important.
Once drywall is installed only a small amount of ajdustabiliy is possible!
Do not expect the studs/joists to be aligned, especially on runs over 8 feet.
Use your laser level! J-Boxes must be in line, plumb and level!
Secure J-Box to structure. Be sure to account for drywall thickness.
Front of J-Box should be mounted just shy of finished drywall surface.

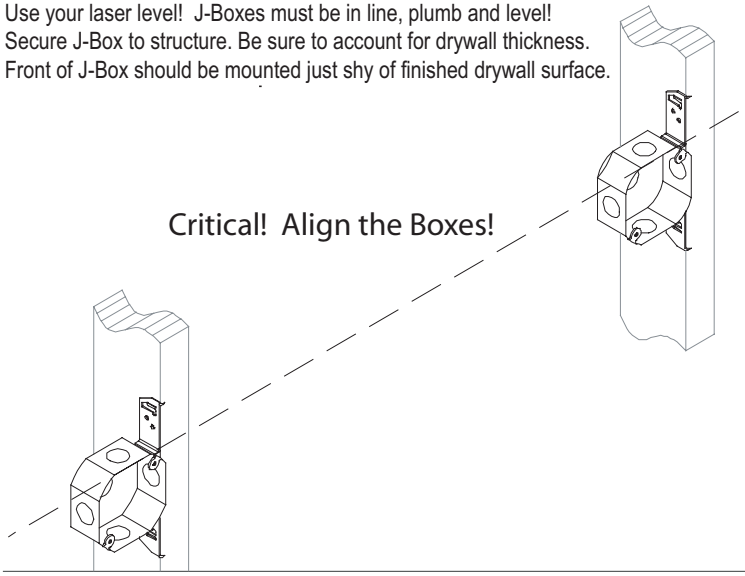

❷ Installing the Remote Ballast Housing:

Mount Remote Ballast Housing to a location that is accessible after installation.
Maximum distance from Rail to a standard ballast is 14'.
Maximum for dimming ballast is 7'. Include Arm length in calculation.
Connect J-Box to Remote Ballast Housing with conduit (not provided).
Rigid or flexible conduit may be used depending on local code requirements.
Secure Mounting Plate to J Box using provided screws.
Do not install Vode Wire Harness at this time.
Do not connect line voltage power at this time.

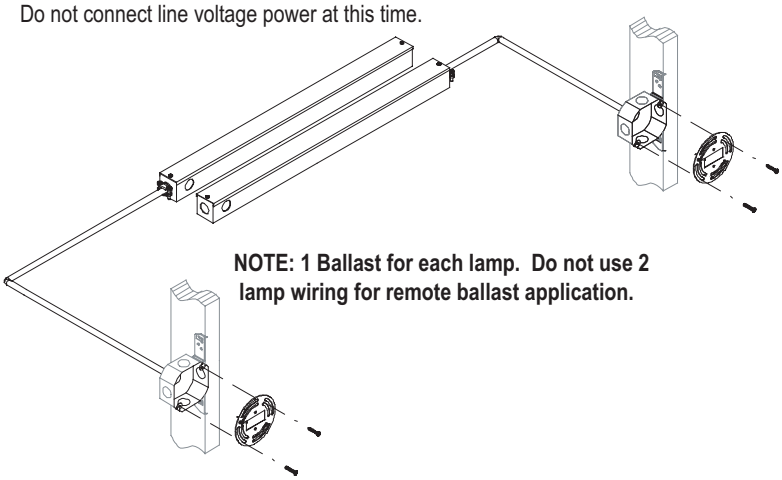

NOTE: 1 Ballast for each lamp. Do not use 2 lamp wiring for remote ballast application.

❸ Connecting Wire Harness and Ballast:

AFTER drywall has been installed:
Insert Wire Harness through Arm Mounting Bracket as shown.
Pull Wire Harness from J-Box to Remote Ballast Housing.
Leave 1" plus length of arm (example: 12" arm + 1" = 13") hanging out of J-Box.
Use the Vode Wire Harness provided. Vode DOES NOT recommend using installor-supplied wire for Ballast to Rail connection.
Refer to Wiring Diagram on Page 4.
Make lamp and line voltage connections to Ballast.
DO NOT power on system at this time.

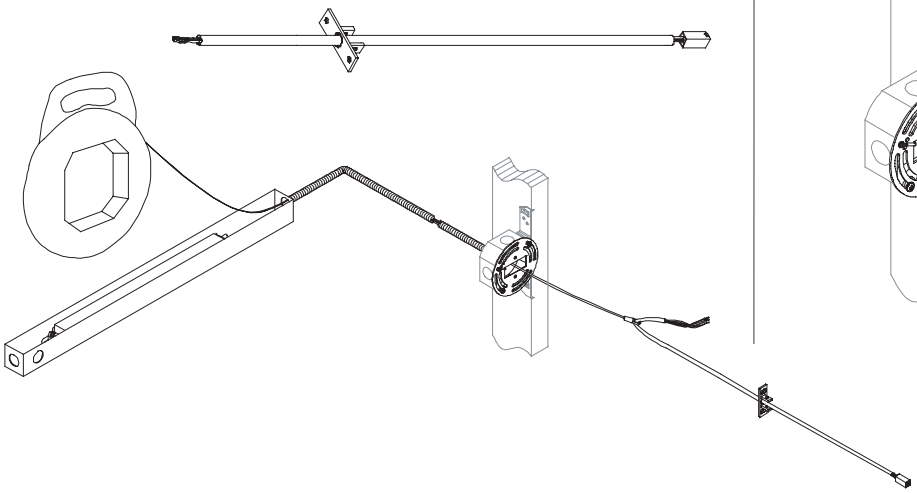

❹ Securing the Mounting Plate:

Secure Arm Mounting Plate to Vode J-Box using screws provided.
Adjust Plates to ensure proper Rail layout as per Layout Diagram on Page 4.
Use **Single Arm Mounting Bracket** at either end of the Rail System.
Use **Double Arm Mounting Bracket** at all center locations of the Rail System.
Secure Arm Mounting Bracket to Mounting Plate using screws provided.

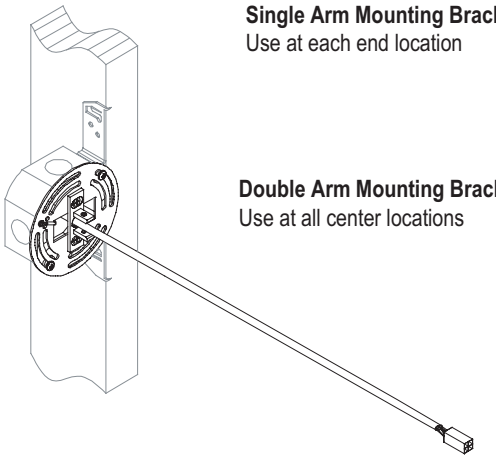

Single Arm Mounting Bracket
Use at each end location

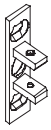

Double Arm Mounting Bracket
Use at all center locations

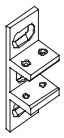

Vode Lighting LLC 1206 East MacArthur Street Suite 3 Sonoma, CA 95476 **T** 707 996 9898 **F** 707 996 9797 www.vode.com

Vode Lighting LLC reserves the right to change materials or modify the design of its product without notification. Patents Pending.

Copyright Vode Lighting LLC 2006. All Rights Reserved.

❺ Installing the Arms:

Slip Wire Harness through Arm (Double Arm shown).
Secure Arm to Arm Mounting Bracket using screws provided.
Slip Canopy over Arm and snap onto Mounting Plate.

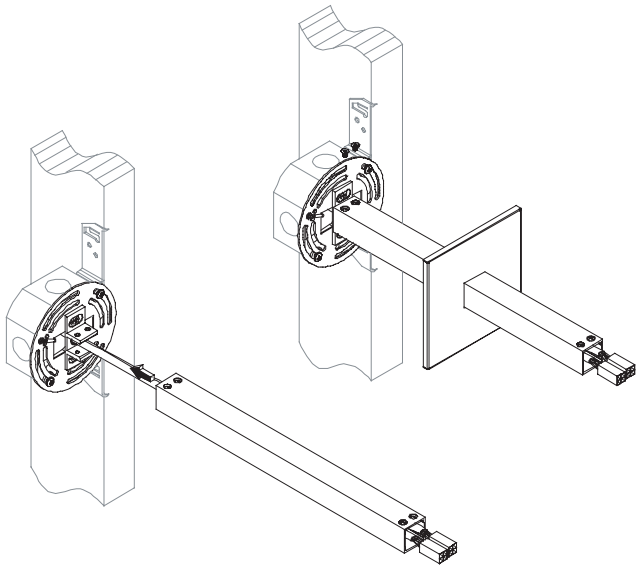

❻ Installing the Rails:

Snap connector on Wire Harness to mating connector on Rail.
Make sure mating connector parts are completely secured.
Install mounting screws as shown.

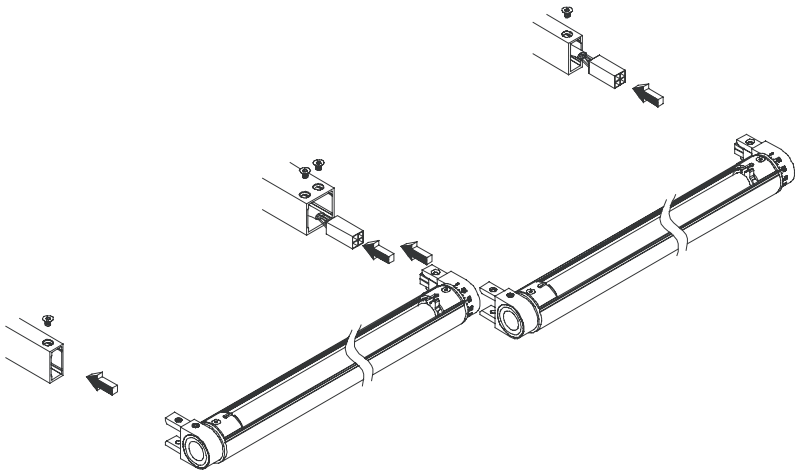

❼ Installing Lamps:

IMPORTANT: Use only T5 lamps in the correct wattage! See lable inside of Rail.

Install Lamps.
For WingRail, BoxRail, and RaceRail,
turn Socket Rotor Tab to properly position and secure lamp.
Power-on system and let lamps burn in per lamp manufacturers recommendations (usually 50-100 hours).

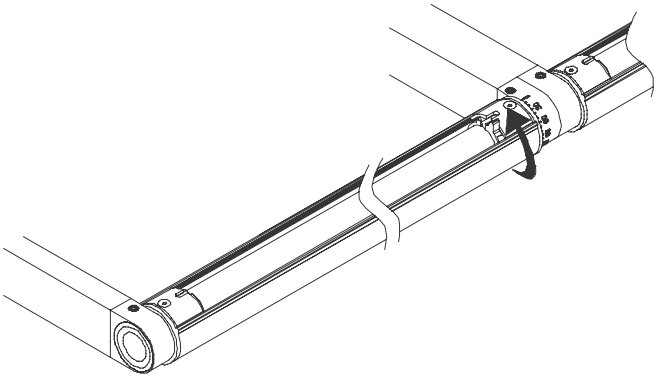

For WingRail, RaceRail and BoxRail use Socket Rotor Tab as shown

❽ Adjusting the Rail:

Rotate Rail into desired position.
Use 8-32 allen key provided to lock Rail into position as shown.

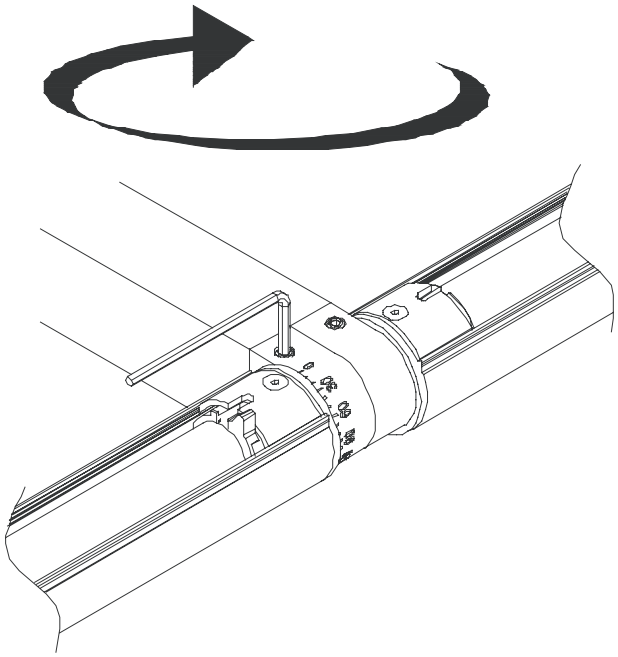

Vode Lighting LLC reserves the right to change materials or modify the design of its product without notification. Patents Pending.

Copyright Vode Lighting LLC 2006. All Rights Reserved.

J-Box Layout and Rail Length

Center to Center Layout for J-Boxes - 6' and 8' Rails

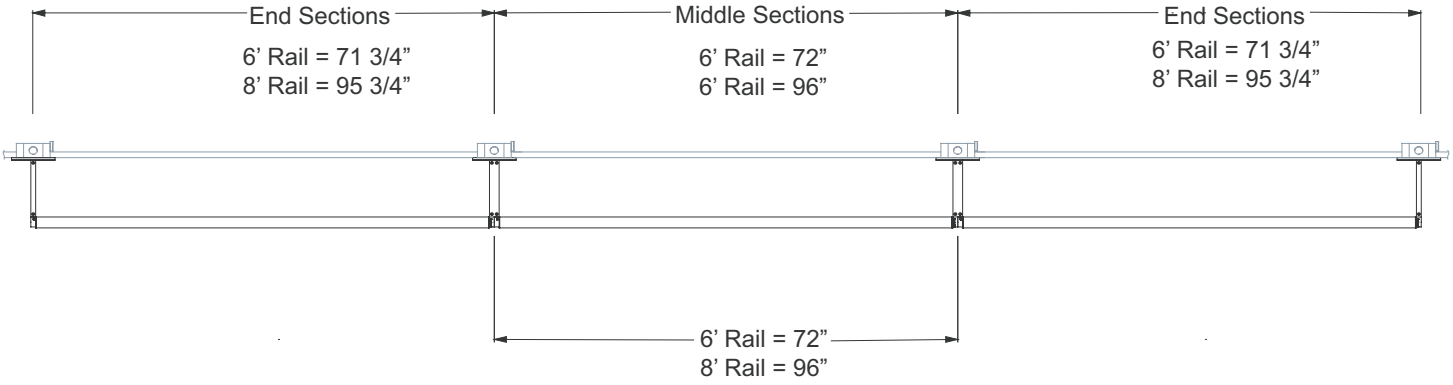

Overall Length - 6' and 8' Rails

Wiring Diagrams for MLR System

1 - lamp wiring

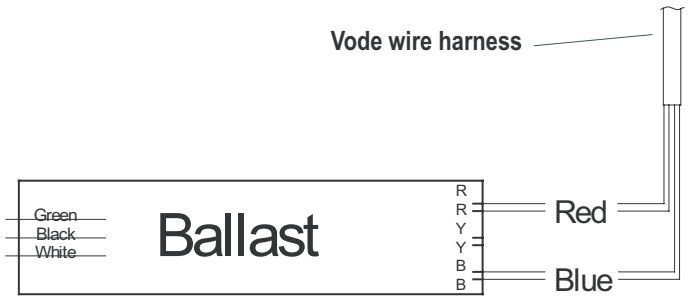

Important:

Maximum Distance from Ballast to Lamp(Rail):

Standard prgrammed-start ballast	14'
Emergency Ballast with standard ballast	10'
Lutron 10% dimming	3'
Lutron 1% dimming	3'
Emergency Ballast with dimming ballast	3'
Lutron Eco-System Ballast	7'

Vode Lighting LLC 1206 East MacArthur Street Suite 3 Sonoma, CA 95476 **T** 707 996 9898 **F** 707 996 9797 www.vode.com

Vode Lighting LLC reserves the right to change materials or modify the design of its product without notification. Patents Pending.

Copyright Vode Lighting LLC 2006. All Rights Reserved.