Please read instructions in their entirety before proceeding with any part of the installation.This luminaire must be installed in accordance with the National Electric Code and local regulations.Use of ballasts or other components not supplied by Vode Lighting voids warranty. To prevent electric shock, turn off electricity at the fuse box before proceeding.Do not install this product in wet locations. UL listed for dry and damp locations only.Retain instructions for future reference. Technical Support: 707-996-9898

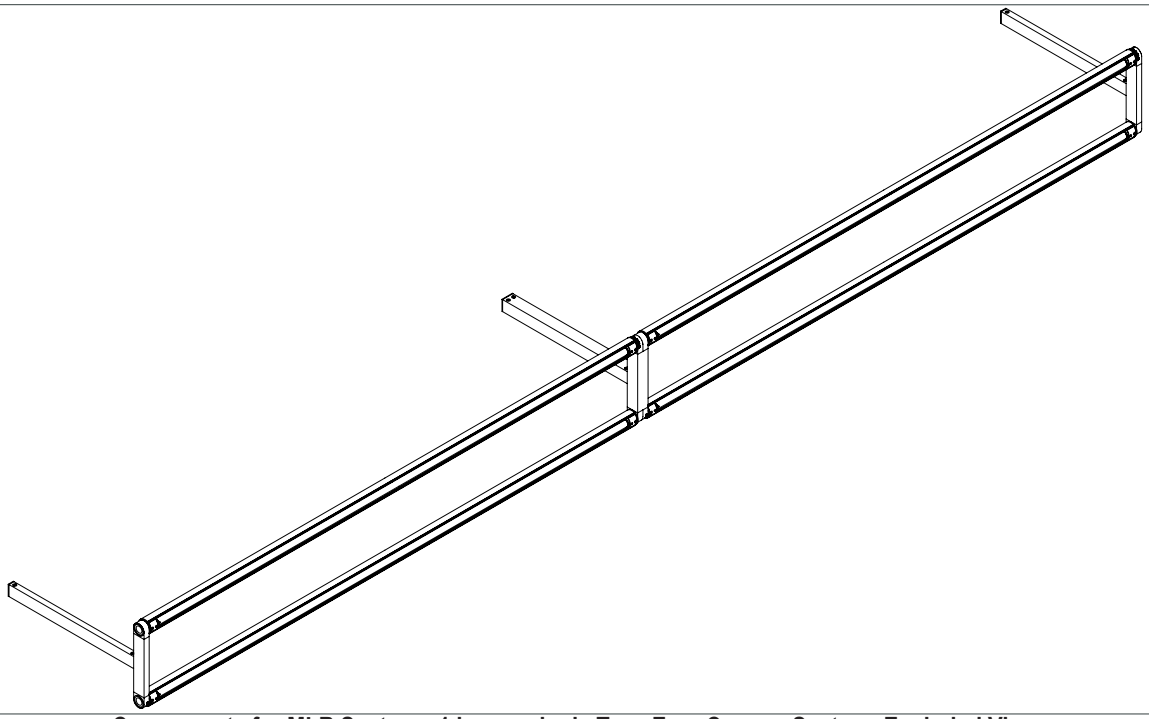

Components for MLR System • 1 lamp • single Tee • Zero Canopy System •Exploded View

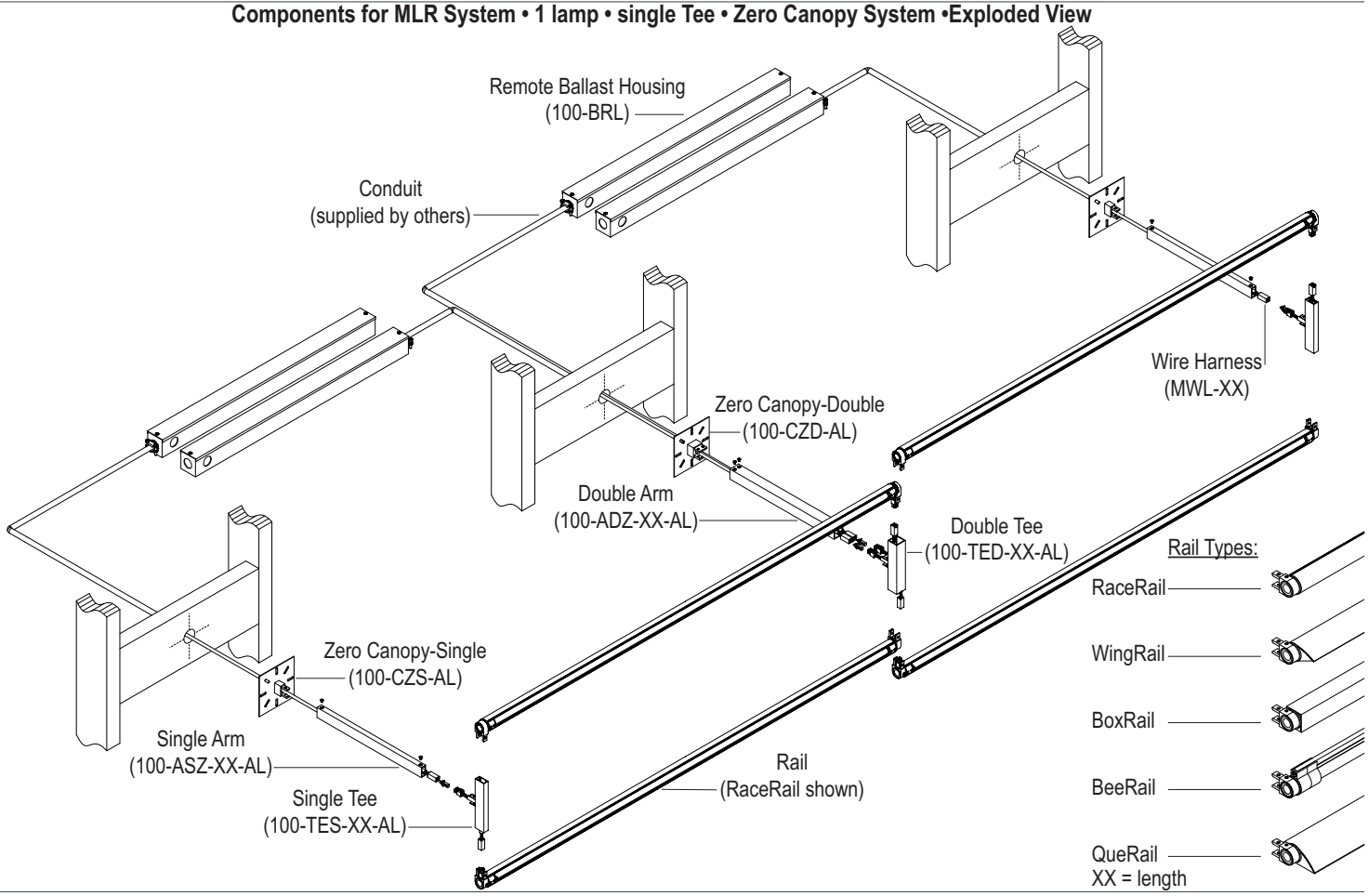

Vode Lighting LLC • 1206 East MacArthur Street Suite 3 • Sonoma, CA 95476 • **T** 707 996 9898 **F** 707 996 9797 • **www.vode.com**

Vode offers a variety of ground-breaking products for the architectural lighting industry and has been granted patents or has applied for patents on these products.
These Installation Instructions spercede all prior publications and are subject to change without notification. © Copyright Vode Lighting LLC 5/2008. All rights Reserved.

❶ Laying out the Zero Canopies:

Accurate placement and alignment of Zero Canopy is very important. Once drywall is installed NO adjustability is possible! To determine Zero Canopy center-to-center location and layout, refer to the layout diagram on page 4. Drill through-hole on blocking. 1" diameter hole is recommended. Feed conduit through hole than secure to conduit adaptor on Zero Canopy as shown. Make sure arm mounting holes are on the top side. Do not expect the studs/joists to be aligned, especially on runs over 8 feet. Use your laser level!!!! Zero Canopies must be in line, plumb and level! Secure Zero Canopy to structure. Be sure to account for drywall thickness.
Do not thighten screws at this time. Re-Check alignment of entire run and double check your center-to-center measurements.
Front of Zero Canopy should be mounted flush to finished drywall surface. Secure Zero Canopy.

Do not remove arm mounting cover at this time.

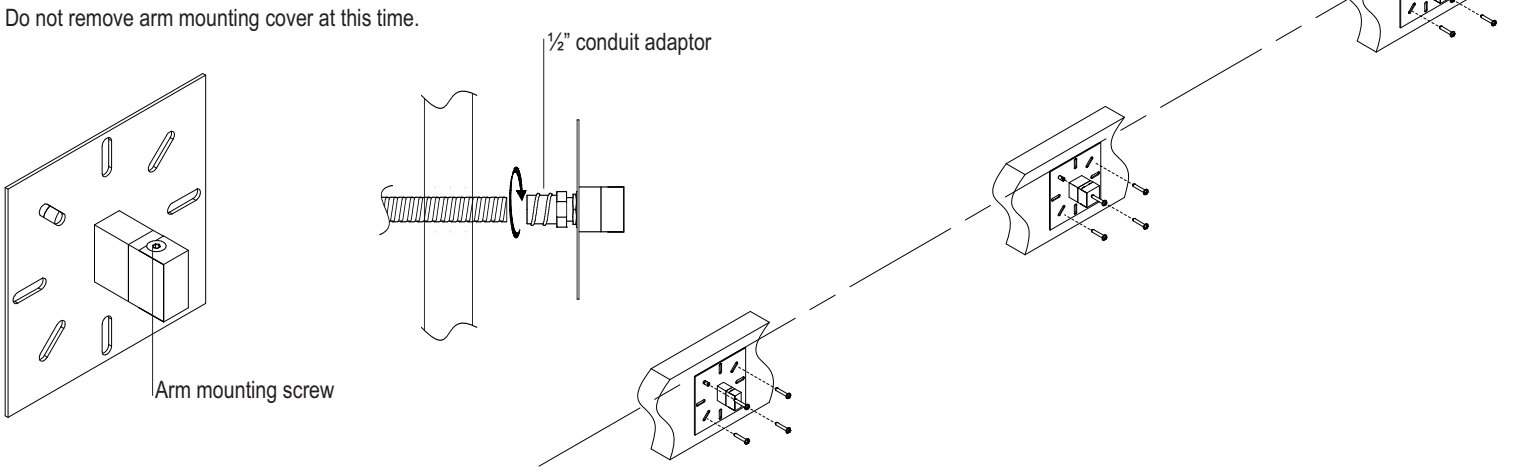

❷ Installing Remote Ballast Housing:

Mount Remote Ballast Housing to a location that is accessible after installation.
Maximum distance from Rail to a standard non-dimming ballast is 14'.
Maximum for dimming ballast is 7'. Include Arm length in calculation.
Cennect Zero Canopy to Remote Ballast Housing with conduit (not provided).
Rigid or Flexible conduit may be used depending on local code requirements.
Do not install Vode Wire Harness at this time.
Do not connect line voltage power at this time.

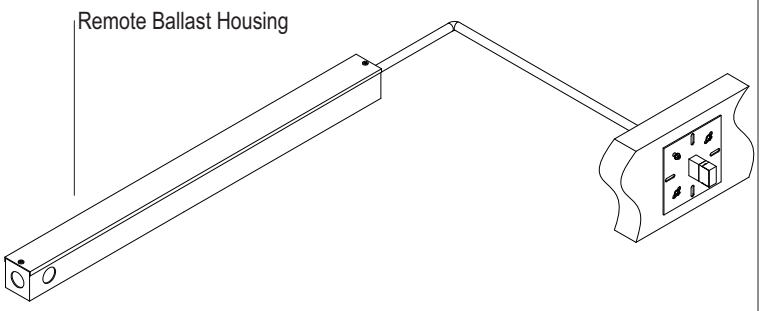

❸ Connecting Wire Harness to Ballast:

AFTER drywall has been installed:

Remove Arm Mounting Cover. Insert Wire Harness through Zero Canopy as shown. Pull Wire Harness through Zero Canopy to Remote Ballast Housing.
Leave length of Arm plus 1" (example: 12" Arm + 1" = 13") hanging out of Canopy.
Use Vode Wire Harness provided. Vode DOES NOT recommend using installer-supplied wire for ballast to Rail connections.
Make lamp and line voltage connections. Refer to Wiring Diagram on page 4.

DO NOT power on system at this time.

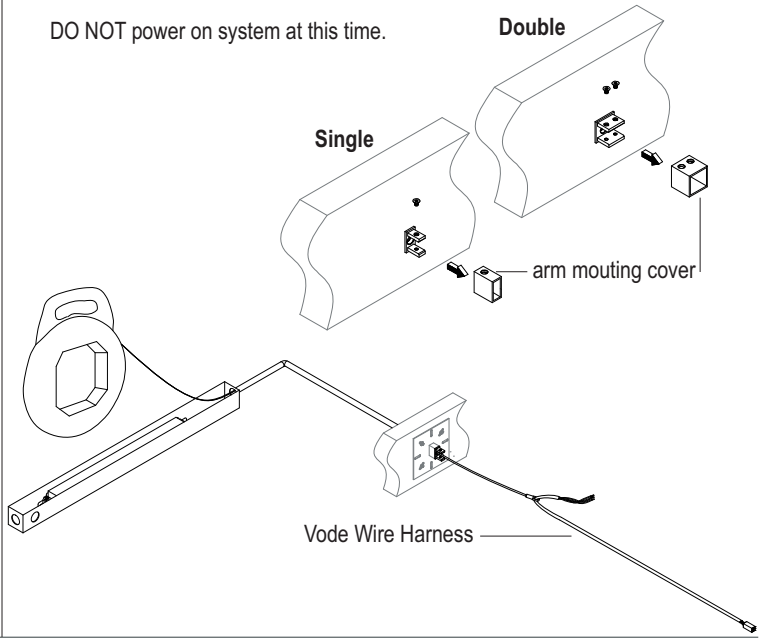

Vode offers a variety of ground-breaking products for the architectural lighting industry and has been granted patents or has applied for patents on these products.
These Installation Instructions spercede all prior publications and are subject to change without notification. © Copyright Vode Lighting LLC 5/2008. All rights Reserved.

❹ Installing Arms:

Slip Wire Harness througth Arm (double arm shown).
Secure Arm to Arm Mounting Bracket using screws provided.

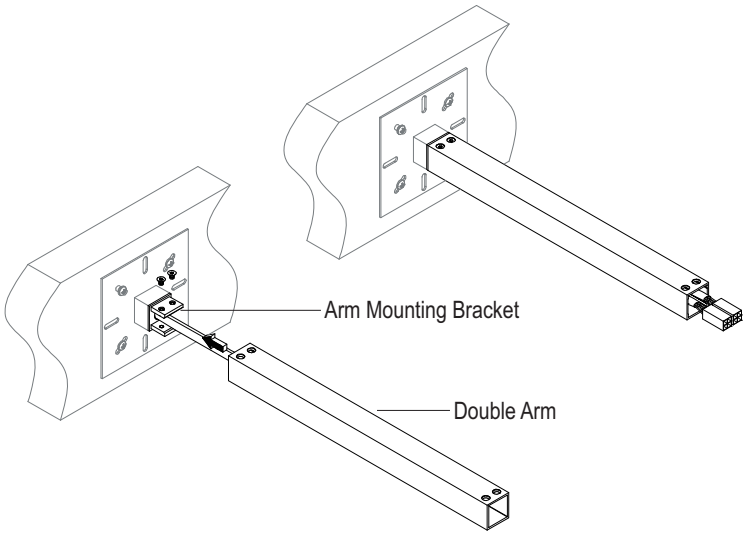

❺ Installing Tees:

Before installing Tees, check wiring diagram on page 4 for correct Tee orientation.
If using WingRail on system, aslo check “WingRail Orientation Install” layout sheet provided by Vode.

Make Wire Harness connections between Arm and Tee as shown.
Make sure mating connector parts are completely secured.
Secure Tee to Arm using provided screws.

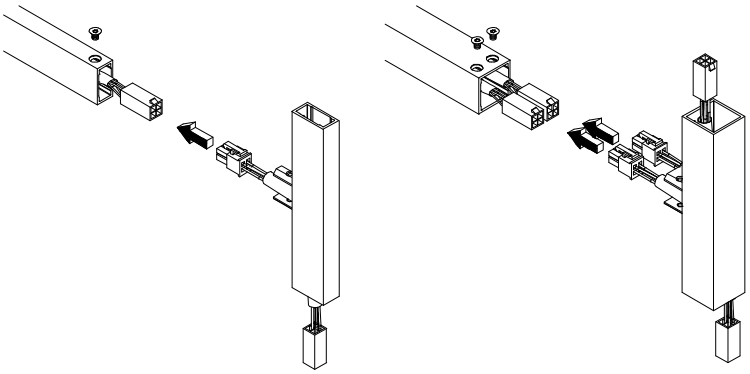

❻ Installing Rails:

Snap connector on Tee to mating connector on Rail.
Make sure mating connector parts are completely secured.
Secure Rail to Tee using provided screws.

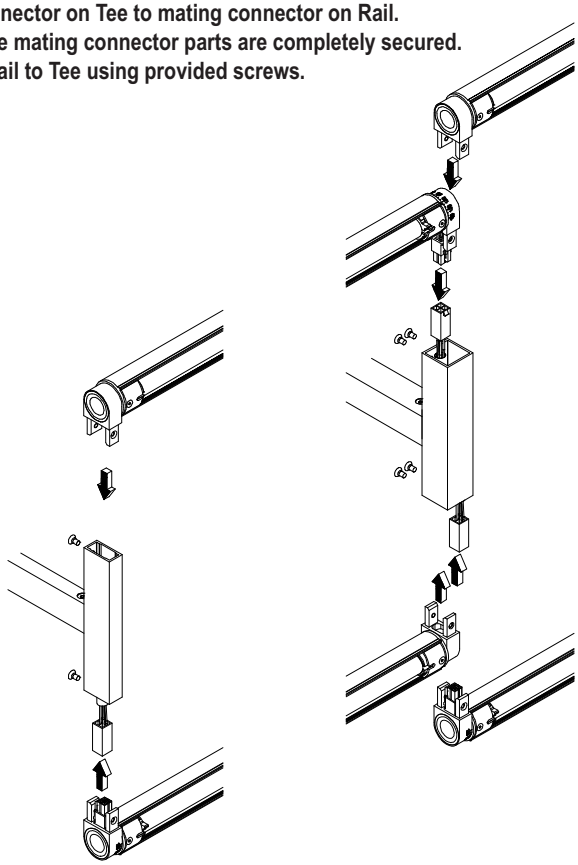

❼ Installing Lamps & Adjusting Rails:

IMPORTANT: Use only T5 lamps in correct wattage! See label inside Rail.

Install lamps. For WingRail, BoxRail and RaceRail (shown), turn socket rotor tab to properly position and secure lamp. If lens is applied, install lens.
Power-on system and let lamps burn in per lamp manufacturers recommendations (usually 50-100 hours).

Rotate Rail to desired position. Using allen key provided, lock Rail into position as shown.

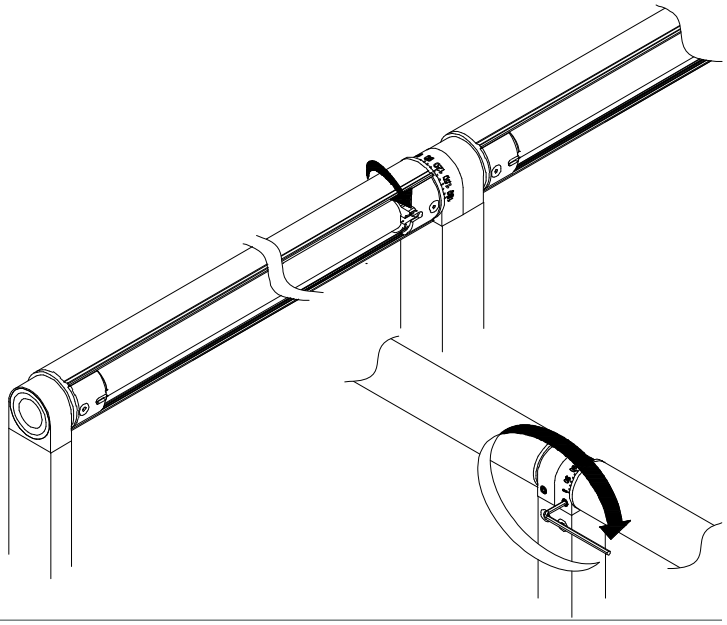

Vode offers a variety of ground-breaking products for the architectural lighting industry and has been granted patents or has applied for patents on these products.
These Installation Instructions spercede all prior publications and are subject to change without notification. © Copyright Vode Lighting LLC 5/2008. All rights Reserved.

Zero Canopy Layout and Rail Lenghts

Center to Center Layout for Zero Canopies - 2', 3', 4', and 5' Rails

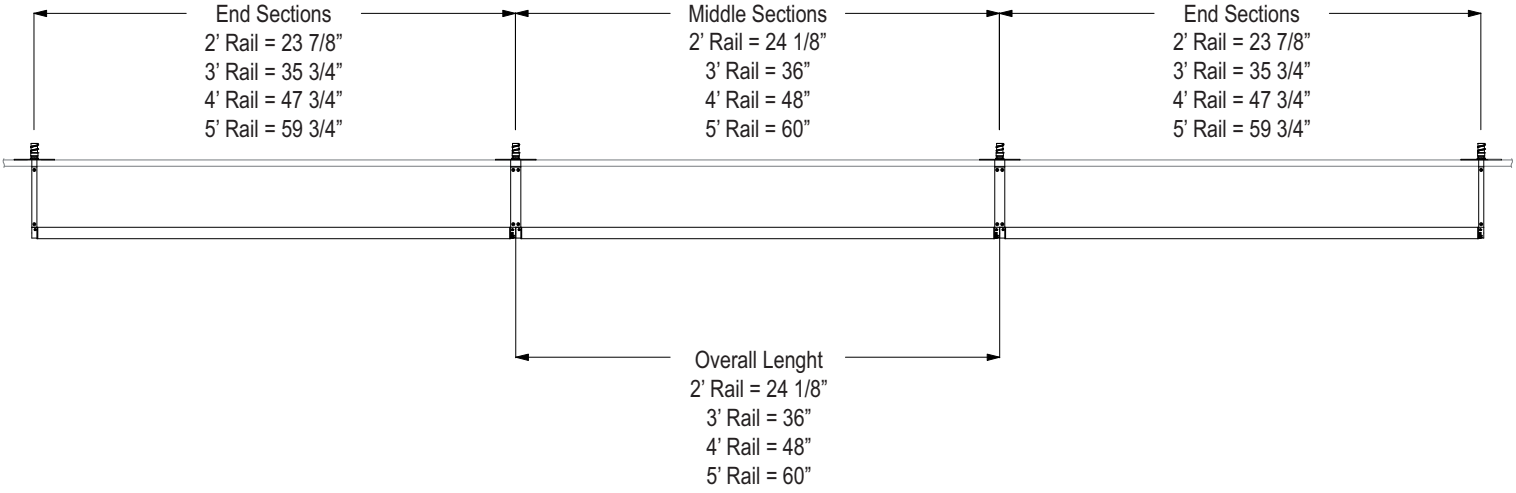

Wiring Diagram for MLR System

1 - lamp wiring for standard non-dimming programmed-start-ballast

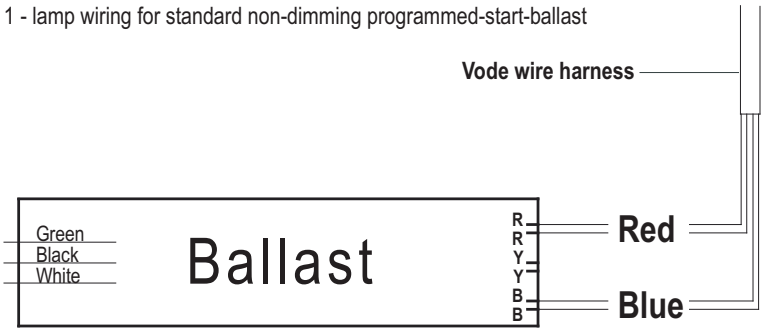

NOTE:
For dimming and emergency ballast wiring, please contact ballast manufacturer.

IMPORTANT:

Do not exceed maximum allowable distance between ballast and furthest socket. Add Rail length, ½ Tee length and Arm-to-Ballast distance in calculation.

Example:
A+B+C = maximum distance allowed.

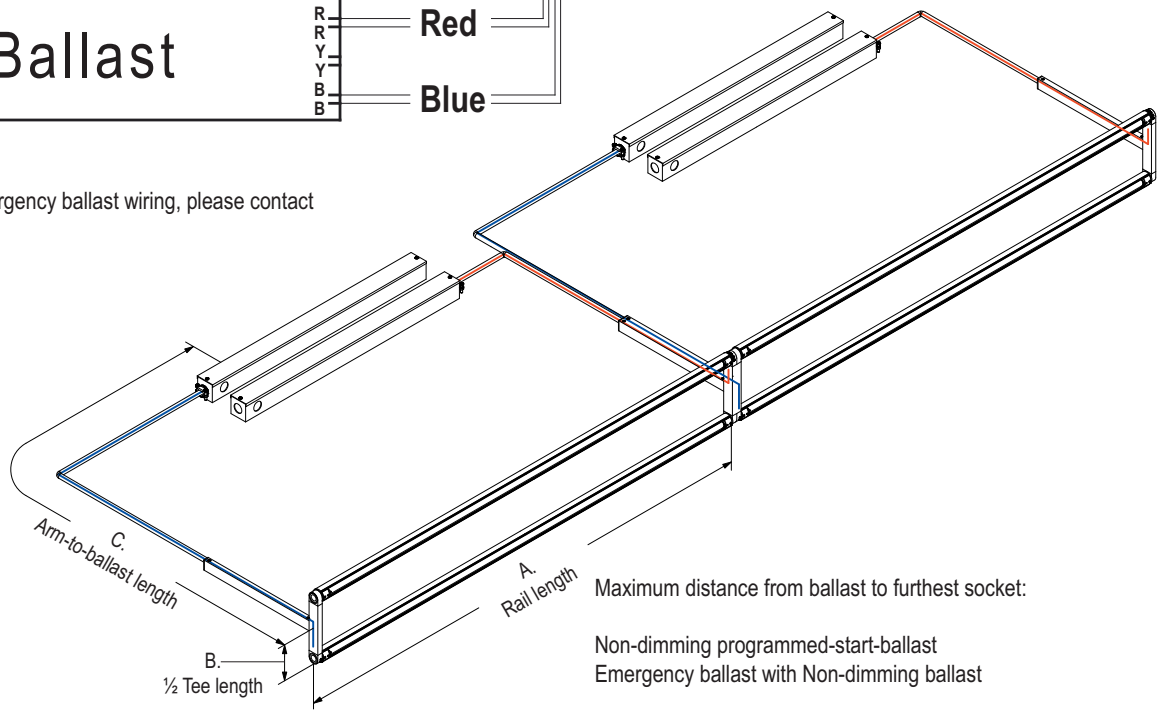

Maximum distance from ballast to furthest socket:

Non-dimming programmed-start-ballast	14'
Emergency ballast with Non-dimming ballast	10'
Lutron 10% dimming	7'
Lutron 1% dimming	7'
Lutron Eco-System ballast	7'
Emergency ballast with dimming ballast	7'

Vode Lighting LLC • 1206 East MacArthur Street Suite 3 • Sonoma, CA 95476 • **T** 707 996 9898 **F** 707 996 9797 • **www.vode.com**

Vode offers a variety of ground-breaking products for the architectural lighting industry and has been granted patents or has applied for patents on these products.
These Installation Instructions spercede all prior publications and are subject to change without notification. © Copyright Vode Lighting LLC 5/2008. All rights Reserved.